KORALEWSKI
INDUSTRIE - ELEKTRONIK

Filter Control FS-21

EasyRange

Koralewski Industrie - Elektronik oHG | Brigitta 26 | 29313 Hambühren
Telefon + 49 (0) 50 84 - 98 00 50 | Fax + 49 (0) 50 84 - 98 00 77
info@koralewski.de | **www.koralewski.de**

DIN EN ISO 9001:2000
Zertifikat: 01 100 000628

Index

1 General Information 4
1.1 Equipment 4
2 Installation 5
2.1 Mechanical Installation 5
2.1 Electrical Installation 5
2.2.1 Connection Diagram 6
3 Operation 6
3.1 Overview of the Display and Operating Elements 6
3.1.1 The LED – Indicators 7
3.2 The LCD – Display 7
3.2.1 One Filter Operating Mode 7
3.2.2 Two Filter Operating Mode 7
3.2.3 Parameter Mode 7
3.3 Function of the Keys 8
3.3.1 Key Combinations 8
3.4 Operating Concept 9
3.4.1 Editing Parameters 10
4 Starting Up 10
4.1 Unit Configuration (Filter Configuration) 10
4.1.1 One Filter Mode 10
4.1.2 Two Filter Mode 10
4.1.3 Two Filter Mode with Half – Duplex Transmission or Parallel Operation 10
4.2 Regeneration Release 11
4.2.1 Regeneration Release according to Time 11
4.2.2 Setting the Regeneration Time 11
4.2.3 Regeneration Release according to Quality 11
4.2.4 Regeneration Release according to Quality (delayed) 11
4.2.5 Regeneration Release according to Quantity 12
4.2.6 Regeneration Release according to Quantity (delayed) 12
4.2.7 Regeneration Release according to Minimum Quantity 12
4.2.8 Regeneration Release according to Minimum Quantity (delayed) 12
4.2.9 Regeneration Release according to Maximum Quantity 12
4.2.10 Regeneration Release according to Maximum Quantity (delayed) 13
4.2.11 Setting the Regeneration Quantities 13
4.3 Valve Selection 14
4.3.1 User defined Valve 14
4.4 Impulse Delay 14
4.5 Step Timings 14
5 System and Display 15
5.1 Change Language 15
5.2 View Change Time 15
5.3 View Reset Time 15
5.4 Standard View 15
6 Service 16
6.1 Service Message 16
6.2 Service Reset 16

Index

7 Operation Value Settings 16
7.1 Regeneration Counter 16
8 Inputs 17
9 Outputs 18
10 Setting the Time 19
11 Manual Operating Options 19
11.1 Changing the Filter in Automatic Mode 19
11.2 Manual Operation 19
11.3 Regeneration Release in Hand Operation 19
11.4 Skip to Next Regeneration Step in Hand Operation 19
12 Fault Messages 19
13 Application and Configuration Examples 20
13.1 Connection of Two FS-21 in Interconnected Operation 20
13.2 Connection of Several FS-21 in Interconnected Operation 20
14 Technical Data 21
14.1 Ordering Information 21
15 Connection Examples 22
16 Default Settings 24
17 Form for Configuration and Parameter Settings 25

1 General Information

The filter control FS-21 meets the basic objectives for control of a one or two filter system with pilot distributors or central control valves. The valve types are selected via configuration and FS-21 automatically adjusts its operation sequence to the selected valve type. Both decarbonisation filters and gravel filters can be controlled.

We recommend the use of our filter control FS-201 for more complex applications. This is equipped with an enhanced range of functions.

1.1 Equipment

- 4-line text display indicating the operating states
- Permanent storage of the configuration and operating data in an internal flash memory
- The time is buffered for at least 72 hours in the event of a power failure
- Operation of several FS-21 in combination with the possibility of mutual interlocking
- 6 relay outputs, 2 of which are assignable with any regeneration step or incident
- 4 digital Inputs
- Regeneration counter for monitoring accomplished regenerations
- Language selection for the text messages (English or German, others on request)

2 Installation

2.1 Mechanical Installation

Mounting dimensions

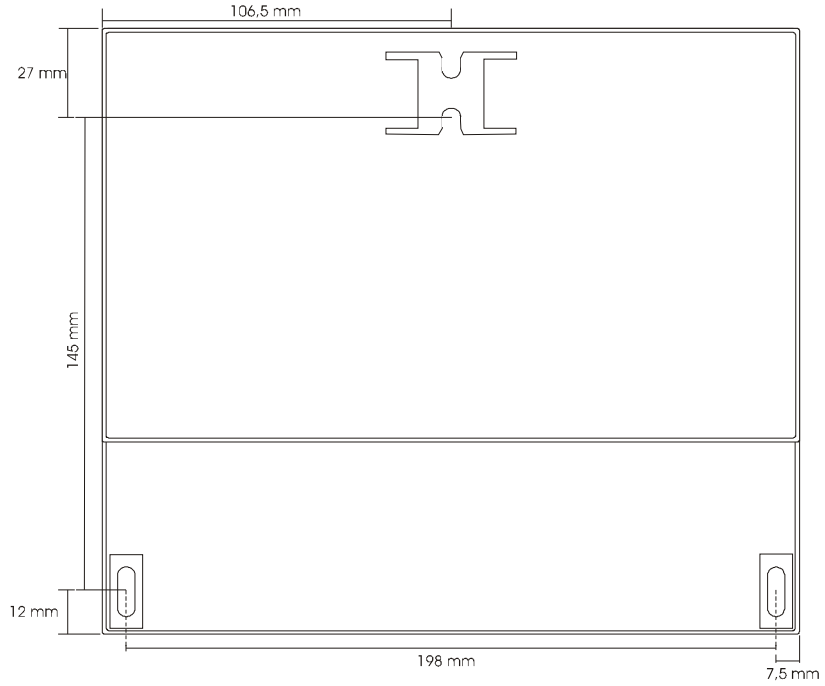

2.2 Electrical Installation

Only trained personnel are authorised to assemble and start up the equipment.

When selecting the cables and electrical connections for the equipment, observe the directives stipulated in VDE 0100 'Directive defining low-voltage equipment with a nominal voltage under 1000 V', VDE 0160 'Equipping low-voltage equipment with electronic operating resources' and the equivalent, respective country regulations.

The electrical connection may only by completed by properly trained personnel (VDE 1000 T. 10).

The device must be disconnected from the mains power supply in the event of service and installation work.

2.2.1 Connection Diagram

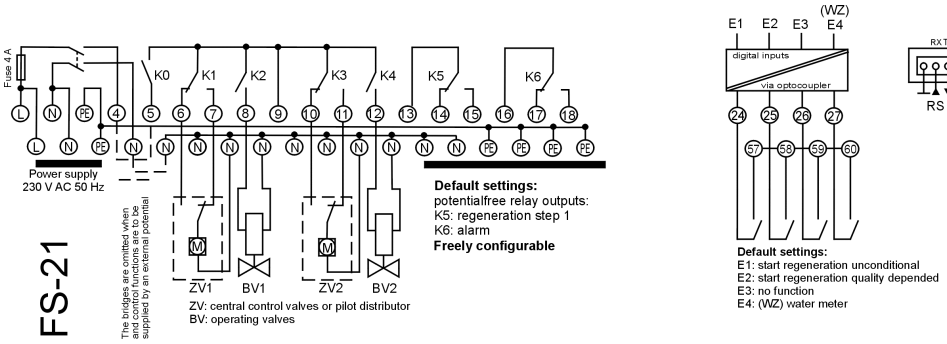

E1339 230 V

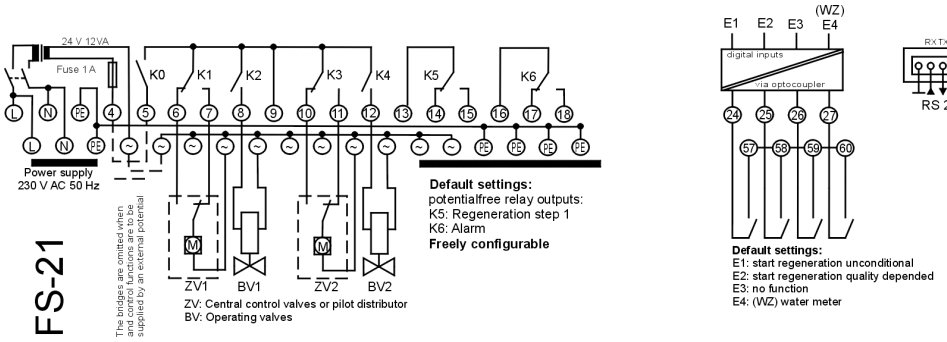

E1340 230 V /24 V

3 Operation

3.1 Overview of the Display and Operating Elements

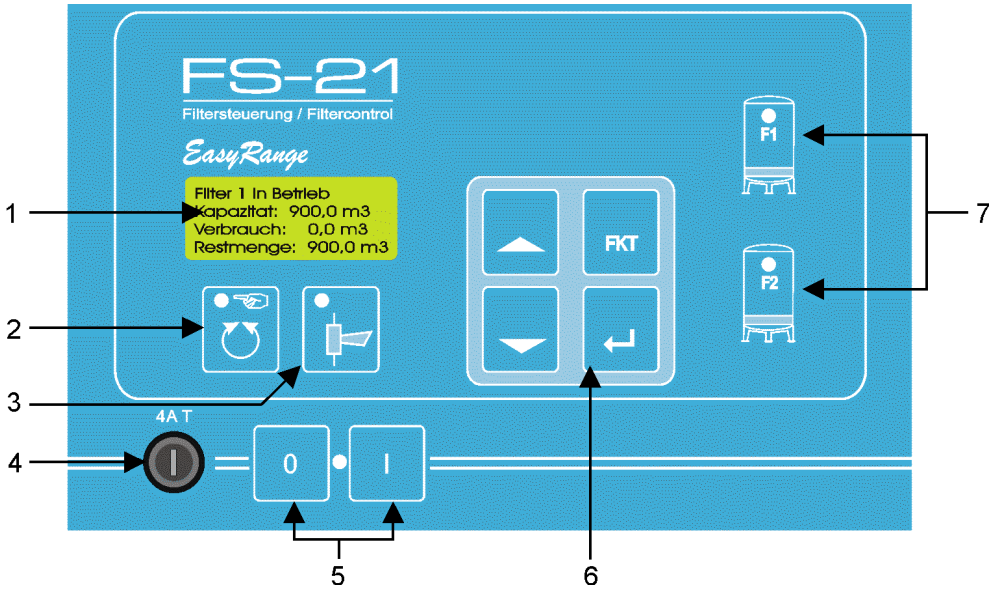

1	LCD Display	**5**	On / Off switch
2	Hand / Auto - key	**6**	Operating panel
3	Acknowledgement - key	**7**	Filter status Indicators
4	Device fuse		

3.1.1 The LED – Indicators

LED (green)

Lights up when the device is switched on and power is supplied.

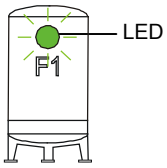

!.LED (green / yellow)

Lights up continuously green when the filter is in operation.
Flashes green at 2s cycless when the filter is ready in standby
Flashes green in a 1 second cycle during regeneration, when step setting mode is accomplished.

Is off when the filter is switched off.

Lights up continuously yellow when filter is in regeneration.

LED (yellow)

Lights up continuously when the filter is in HAND mode.
Is off when the filter control is in AUTO mode.

LED (red)

Flashes at 1 s intervals when a fault has occurred.
Lights up continuously when a fault is acknowledged but the cause not yet located.

3.2 The LCD – Display

The LC display serves to display operating states (operating mode) and the parameters (configuration mode).

3.2.1 One Filter Operating Mode

```
Filter 1 operating
Capacity:      10.0 m3
Consumption:    8.0 m3
remaining:      2.0 m3
```

3.2.2 Two Filter Operating Mode

More display variations are can be set up in two-filter mode and are explained in more detail in Chapter 4.

```
Filter1 Cap: 10.0 m3
Consump.:     8.3 m3
Filter2 Cap: 10.0 m3
Consump.:     5.4 m3
```

E.g.: Display of the operating status in two-filter mode. Lines 1 and 2 display the states for Filter 1, Lines 3 and 4 display the states for Filter 2.

3.2.3 Parameter Mode

```
Type of Device:

one Filter
```

In Parameter mode, Line 1 displays the parameter menu option and Line 2 the parameter which can be changed.

3.3 Function of the Keys

I	ON – key	This key is used to switch the control unit on.
0	OFF – key	This key is used to switch the control unit off.
	Hand – key	This key is used to switch Hand mode on and off.
	Acknowledgement – key	This key is used to acknowledge faults and release the buzzer relay contact again.
▲	Up (Arrow) – key	When used in the display, this key is used to scroll upwards in the values displayed. In Parameter mode, this key is used to increase the input value.
▼	Down (Arrow) – key	When used in the display, this key is used to scroll downwards in the values displayed. In Parameter mode, this key is used to decrease the input value.
FKT	Function – key	In Parameter mode, this key is used to move one level back or to cancel an entry.
↵	Enter – key	This key is used to switch to Parameter mode or to confirm input.

3.3.1 Key Combinations

FKT + ▲	Change languages	Change the language by pressing the Function – key and Up – key simultaneously.

3.4 Operating Concept

Parameter configuration is distributed amongst several parameter menus. The respective parameter options are contained in these menus. The parameter options can be accessed as follows by press the Enter key in one of the menus; press the FKT (Function) key to exit from the menu.

Note: Not all the parameters can be set by means of manual input on the control unit.

The menus are selected according to the operating concept illustrated below:

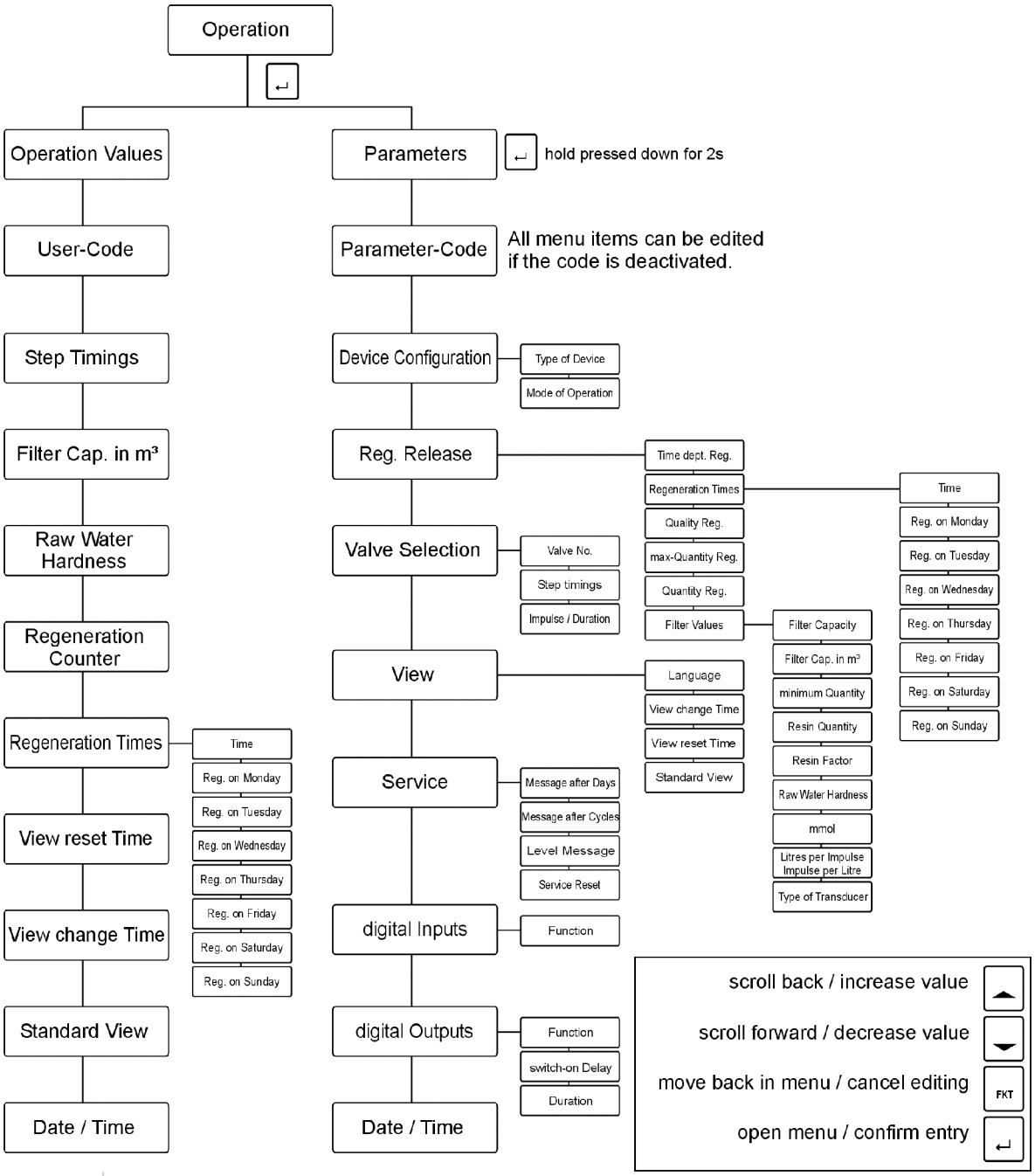

3.4.1 Editing Parameters

After having selected a parameter option whose value you want to change, it can be edited as follows:

- Press the Enter – key → The last digit in the number flashes
- Press the Up – or Down – key to change the value
- Press the Enter – key to skip to the next digit

When all the digits have been changed and the last editable digit confirmed with 'Enter', the values are saved. If you exit from editing by pressing the FKT key prior to completing editing of the last digit, the old value remains unchanged.

Use the FKT key at this point to exit from this parameter option and skip to the next one.

Note: If no parameter editing was started, press the FKT key to exit from this option and skip directly to the next parameter option without changing the parameter. Not all the parameters can be set by means of manual input on the control unit.

4 Starting Up

After switching the control unit on, certain setting adjustments must be carried out in order to adapt the filter control to your specific filter system.

Basic settings can be entered directly on the control unit. Input can be made quickly and easily using the parameterisation – software supplied. The software is also available on our homepage http://www.koralewski.de for downloading.

4.1 Unit Configuration (Filter Configuration)

Parameter mode is opened by pressing the Enter key for approximately 2 seconds. If the password input lock is active, a prompt appears requesting the 4-digit PIN code. The parameters can only be edited after entering the PIN code (parameter code) correctly. If an password is entered incorrectly or not at all, the operating values and parameters can only be viewed but not changed.

The parameter setting options are described below:

4.1.1 One Filter Mode

```
Type of Device
one Filter
```

After selecting 'one Filter' mode, the FS-21 is operated with just one filter.

4.1.2 Two Filter Mode

```
Type of Device
two Filter
```

After selecting 'two Filter' mode, two filters are operated by the FS-21.
A further option is available to define whether the two filters should be run in parallel operation or half – duplex transmission.

4.1.3 Two Filter Mode with Half – Duplex Transmission or Parallel Operation

```
Mode of Operation
Half-duplex Transm.
```

```
Mode of Operation
Parallel Operation
```

In half-duplex transmission mode, only one filter is in 'OPERATION' at a time, the other filter is in standby. Following a regeneration request, the filter in operation is regenerated and the filter in standby is put into operation.

When parallel operation is activated, both filters are in 'OPERATION' as long as no regeneration is taking place. Following a regeneration request one of the filters is regenerated, when the next request is received, the other filter is regenerated.

4.2 Regeneration Release

Use the menu 'Reg. Release' to set the type of release for regeneration as well as the required values for selection.

There are different possibilities to start regeneration. Types of release may be also combined.

4.2.1 Regeneration Release according to Time

```
Time dept. Reg.

Yes
```

If the Filter shall be regenerated at a certain time, independent of the amount of water used or an external signal, set regeneration with respect to time only.

4.2.2 Setting the Regeneration Time

```
Regeneration Times
Time
12:00
```

```
Regeneration Times
Reg. on Monday
Yes
```

```
Regeneration times
Reg. on Tuesday
No
```

```
Regeneration times
Reg. on Wednesday
Yes
```

Time and day(s) are entered here, at which regeneration is to be accomplished.

Note: Scroll through the different setting points of the sub-menu Regeneration Times with UP/DOWN. (*see also 'Filter Capacity' chap. 4.2.1.11*).

4.2.3 Regeneration Release according to Quality

```
Quality Reg.

Yes
```

If this type of release is selected, regeneration will be released by an external signal, which is connected e.g. to E2 (Kl25). This external signal may come from a water analysis device (residual hardness analyser) or from a control room.

4.2.4 Regeneration Release according to Quality (delayed)

```
Time dept. Reg.

Yes
```

```
Quality Reg.

Yes
```

If the filter shall be regenerated via an external signal, however at a certain time only, regeneration release will be set to time and externally.

4.2.5 Regeneration Release according to Quantity

```
Quantity Reg.
Yes
```

If the filter should only be regenerated according to a specific quantity of water, the regeneration release is set to Quantity in the FS-21 configuration.

***Note:* If a new regeneration amount was entered, the new regeneration amount will be effective after the regeneration of both filter with the old amount.**

4.2.6 Regeneration Release according to Quantity (delayed)

```
Time dept. Reg.
Yes
```

```
Quantity Reg.
Yes
```

If the filter should be regenerated according to a specific quantity of water but also at a specific time, the regeneration release is set to Quantity and Time in the FS-21 configuration.

4.2.7 Regeneration Release according to Minimum Quantity

```
Quality Reg.
Yes
```

```
Filter Values
minimum Quantity
   10 m3
```

If the filter should be regenerated according to an external signal but also following a specific minimum quantity, the regeneration release is set to Quality in the FS-21 configuration and a value greater than 0 m^3 must be set for the minimum quantity.

Note: The pre-setting for the minimum quantity is done in the submenu 'Filter values' (*see chap. 4.2.11*).

4.2.8 Regeneration Release according to Minimum Quantity (delayed)

```
Time dept. Reg.
Yes
```

```
Quality Reg.
Yes
```

```
Filter Values
minimum Quantity
   10 m3
```

If the filter should be regenerated according to an external signal but also following a specific minimum quantity and at a certain time, the regeneration release is set to Time, Quantity and Quality in the FS-21 configuration.

Note: The pre-setting for the minimum quantity is done in the submenu 'Filter values' (*see chap. 4.2.11*).

4.2.9 Regeneration Release according to Maximum Quantity

```
Quality Reg.
Yes
```

```
max-Quantity Reg.
Yes
```

If regeneration of the filter is selected according to an external signal, it is possible to define its release through a maximum quantity. The filter is then regenerated on reaching a maximum quantity even if the external signal has not been received.

Release via the maximum quantity prevents a filter being 'run too long' if, for example, the external signal from a water analysis unit fails.

Note: If filter regeneration according to maximum quantity is selected,

- regeneration according to quantity (Chapter 4.2.5 / 4.2.6) is deactivated.
- the value for the maximum quantity is entered in the 'capacity' field.

4.2.10 Regeneration Release according to Maximum Quantity (delayed)

```
Quality Reg.
Yes
```

```
max-Quantity Reg.
Yes
```

```
Time dept. Reg.
Yes
```

If the filter should be regenerated according to an external signal but also following a specific maximum quantity and at a certain time, the regeneration release is set to Time, Maximum Quantity and Quality in the FS-21 configuration.

4.2.11 Setting the Regeneration Quantities

If **Filter capacity** is selected in the case of a quantity - related release, the regeneration quantity must be entered directly. If raw water hardness is selected as the quantity release factor, in °dH or mmol/l, the specific filter values must be entered and the FS-21 automatically determines the regeneration quantity from them.

Note: In the case of releases based purely on time, the set quantity values are not relevant.

4.2.11.1 Filter capacity

```
Filter Values
Filter Capacity
Yes
```

```
Filter Values
Filter Cap. in m3
000.0 m3
```

The regeneration quantity, according to which a quantity - dependent regeneration should occur, must be entered directly.

If **Filter Capacity** is selected as a value, the quantity (filter capacity) to trigger a regeneration must be entered by the operator. The resin quantity, resin factor and raw water hardness are not taken into account in this case.

setting range filter capacity (minimum quantity in dependence on this): **0 .... 3200** m³

Note: Scroll through the different setting points of the sub-menu 'Filter Capacity' with UP/DOWN. (*see also 'Setting the Regeneration Release Times' chap. 4.2.2*).

4.2.11.2 Raw Water Hardness in °dH

```
Filter Values
Resin Quantity
 000 l
```

```
Filter Values
Resin Factor
 000.0
```

The specific filter values are entered (resin quantity, resin factor and raw water hardness in °dH) and the filter control unit automatically calculates the regeneration quantity after which the quantity-dependent regeneration should occur.

Formula for the automatic calculation of the Filter capacity:
Filter capacity [m³] = (Resin factor [°dH*m³/L] * Resin quantity [L]) [°dH]

setting range Resin Quantity: **0 .... 3200** l, *Resin Factor:* **0,0 .... 999,9** °dH*m³/L

Note: The resin factor corresponds to the usable volume capacity NVK.

```
Filter Values
Raw Water Hardness
 0.00 °dH
```

```
Filter Values
mmol
00.000
```

If **Raw water Hardness in °dH** is selected as a filter value, the values for resin quantity, resin factor and raw water hardness in °dH must also be entered. The quantity (filter capacity) for a regeneration release is then automatically calculated by the FS-21.

setting range Raw Water Hardness: **0,00 .... 99,99** °dH, *mmol:* **0,000 .... 17,990**

4.2.11.3 Type of Transducer and Impulse

```
Filter Values
Type of Transducer
Litre per Impulse
```

```
Filter Values
Litre per Impulse
 100
```

There are two kinds of transducer available for selection, namely 'Litre per Impulse' and 'Impulse per Litre'. The number of impulses per litre or litres per impulse can be entered in the menu.

setting range: **0 .... 9999** Litre per Impulse, resp. **0 .... 9999** Impulse per Litre

4.3 Valve Selection

```
Valve No.
PVP-4
    1
```

These parameter options are used to set the pilot distributor or central control valve used. The following valve types are available for selection:

No.	Manufacturer	Valve type	Name
1	Heyl	pneumatic pilot distributor	PVP-4
2	Heyl	electric pilot distributor	PVE
3	WWS	central control valve	410 / 420 / 541 / 435
4	WWS	central control valve	435
5	WWS	central control valve	415 / 426
6	WWS	central control valve	440 / 441
7	Techap	multiway reversing valve	MUVK 20-40
8	user defined	user defined	
9	user defined	user defined	

4.3.1 User defined Valve

If the applicable valve type is not provided in the selection table, an user defined valve can be configured using the parameterisation – software and choosing number 8 or 9. Detailed settings, as the entries for manufacturer, type of valve, and designation, as well as the definition of the number of steps are available only by using the parameterisation – software. An in this manner configured valve is, as well as the predefined valves, selectable and, with the below described valve settings, configurable on device.

4.4 Impulse Delay

```
Impulse Duration

    90 s
```

If IMPULSE is selected as the release type, the duration of the impulse must be defined here in seconds. In the case of HALF-DUPLEX, the minimum running time must comply with the longest half - duplex time of the pilot distributor.

setting range: **0 .... 9999** s

4.5 Step Timings

```
Step Timings
Step Delay 01
    60 s
```

After selecting a valve type or creating a user - defined valve, the step timings for the individual regeneration steps can be set. The number of steps is dependent on the valve selected.

setting range: **0 .... 9999** s

Note: Using the parameterisation – software an individual description can be entered for each step of the respective valve.

5 System and Display

This menu is used to set the display the format and the display parameters for the LCD-display as well as system settings.

5.1 Change Language

```
Language
    2
```

You can change between both languages available for the device.

selection: **1** or **2**

5.2 View Change Time

If several display values are possible, e.g. remaining quantity and time-controlled release, this option can be used to define the time interval at which the display view is changed.

setting range: **0 .... 100** s

If the time is set to 0 seconds, the view will not automatically be changed and the standard view is displayed continuously.

5.3 View Reset Time

The Arrow keys are used to scroll through the individual parameter values in the display view. If a time greater than 0 s is defined for this setting, the system automatically reverts to the standard view after the time defined has elapsed.

setting range: **0 .... 200** s

If the time defined is 0 s, the display view selected using the Arrow keys remains until a new value is selected with the Arrow keys or the FS-21 is restarted.

5.4 Standard View

During operation it is possible to scroll through the operating values and regeneration values by using the 'Up' – key. One of 4 available value - overviews can be selected as 'Standard View'. The display switches back to this 'Standard View' automatically after the view reset time elapsed (if a value other than 0 s is set), after a regeneration is completed or by pushing the 'FKT' – key.

The following selection is available:

```
Filter 2 operating
Capacity:    10.0 m3
Consumption:  0.0 m3
remaining:   10.0 m3
```

Active filter (**0**):

Displays the total capacity, consumption and the remaining quantity to the regeneration of the currently active filter.

```
Filter1 Cap:  9.5 m3
Consump.:     0.5 m3
Filter2 Cap:  9.5 m3
Consump.:     0.5 m3
```

Both filters (**1**):

Displays the remaining capacity to regenerate and the current consumption of both filters.

```
Date / Time
Time  7:53 h 45 s
Tuesday
Date  16.06.2009
```

Date / Time (**2**):

Displays the set date, the day of the week and time.

```
Overview

Filter 1:   3
Filter 2:   6
```

Regeneration Overview (**3**):

Displays how many regenerations the respective filter has made.

6 Service

The **Service** menu contains settings and display views which are mainly relevant for the system manufacturer.

Note: Activating / deactivating of maintenance messages as well as editing of the message text can only be done by parameterisation – software. The settings of the running times for the service messages also is possible directly on the device.

6.1 Service Message

```
Message after Days
    90
```

If a value greater than 0 is set here, a service message appears after the set number of days.

setting range: **0 .... 9999**

If the value 0 is set here, the Message After Days function is not active.

```
Message after Cycles
    15
```

If a value greater than 0 is set here, a service message appears after the set number of regeneration cycles.

setting range: **0 .... 9999**

If the value 0 is set here, the Message After Cycles function is not active.

6.2 Service Reset

```
Service Reset
Reset
```

The counter for service messages after days and cycles are reset.

7 Operation Value Settings

The Operating Value menu is provided so that the system operator can change operating values quickly and easily. The most important setting values can be changed here without having to scroll through all the menus.

The following operating values can be edited, depending on the filter configuration:

- Step timings
- Filter capacity / Raw water hardness
- Regeneration release times
- Settings for the display view
- Date / Time

7.1 Regeneration Counter

```
Regeneration Counter
    3
```

The counter displays the number of regenerations which have been completed since the last RESET.

8 Inputs

In the case of the inputs, using the parameterisation – software it is possible to select whether the signal should be triggered according to the closed- circuit or open-circuit principle.

Closed-circuit principle:

If the contact connected to this input is closed, the signal is not evaluated. An evaluation occurs when the contact opens.

Open-circuit principle:

If the contact connected to this input is open, the signal is not evaluated. An evaluation occurs when the contact closes.

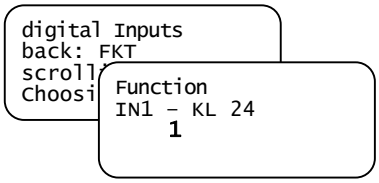

Various functions can be assigned to the inputs.

The following functions are available for selection:

No.	Function	Description
0	No function	No function is assigned to the input.
1	Start regeneration (unconditional)	If this signal is received on the relevant input, a regeneration is triggered immediately regardless of whether other release conditions are fulfilled. This function corresponds to a regeneration release initiated manually.
2	Start regeneration (external signal)	This function causes a regeneration to be started by means of an external signal (e.g. quality measuring device). Other regeneration conditions (e.g. quantity or time) are not taken into account.
9	Enable regeneration release	If an input has been assigned this function and the FS-21 is running in two filter operation with half-duplex mode, regeneration of the filter to be regenerated is only started when the regeneration release is issued via this input.
255	Water meter contact (E4)	If a water meter contact is required for the quantity - related release, this function must be assigned to input **E4**.

Note: Inputs which are not used should be set to 'No function'.

9 Outputs

```
Function
Output 5
    1
```

```
switch-on Delay
Output 5
     1 s
```

```
Duration
Output 5
     1 s
```

With regard to the outputs, using the parameterisation – software it is possible to select whether the relay should open or close when a signal / event is received (closed-circuit/open-circuit principles).

In addition, the outputs 5 and 6 can be assigned specific functions, and the delay and running time set. The setting range for the delay and running times is **0** to **9999** seconds.

The following functions are available for the relay outputs:

No.	Function	Description
0	No Function	No function is assigned to this relay.
1	Regeneration step 1	The relay is activated when the filter is in Step **1**.
2	Regeneration step 2[1)]	The relay is activated when the filter is in Step **2**.
3	Regeneration step 3[1)]	The relay is activated when the filter is in Step **3**.
4	Regeneration step 4[1)]	The relay is activated when the filter is in Step **4**.
5	Regeneration step 5[1)]	The relay is activated when the filter is in Step **5**.
6	Regeneration step 6[1)]	The relay is activated when the filter is in Step **6**.
7	Regeneration step 7[1)]	The relay is activated when the filter is in Step **7**.
8	Regeneration step 8[1)]	The relay is activated when the filter is in Step **8**.
9	Regeneration step 9[1)]	The relay is activated when the filter is in Step **9**.
10	Regeneration step 10[1)]	The relay is activated when the filter is in Step **10**.
11	Operate FS-21	The relay is activated when the FS-21 is in operation.
23	Regeneration lock (input En) [2)]	The relay is activated when a regeneration is currently in progress. This serves to lock other FS-21 control units.
26	Alarm	If a relay is configured for alarms, it is activated when a fault message (see chapter 12) occurs. The relay is switched after the delay time has expired and remains active until the ENTER key is pressed. If a further fault message is received while a fault message already acknowledged is still active, the relay is switched gain (new value message).
27	Recycle	The general recycle function activates the relay assigned to it when a filter is in operation but no water consumption occurs. In this case, the 'Switch - on delay' and 'Switch - on time' times run cyclically in an alternating sequence. The switch - on delay is repeatedly restarted through the water meter impulse.

[1)] The number of steps is depending on the type of selected valve.

Note: The runtime set for the relay for **Functions 1 to 9** is always fully completed in Automatic operation so that it is possible that the corresponding relay remains switched even when the step has ended (runtime greater than the step timing).

[2)] In name 'input En' the 'n' represents the number of the selected input.

10 Setting the Time

```
Date / Time
Time   9:05 oCl 12 s
Date  16.06.2009
Tuesday
```

The time and date are set here.

11 Manual Operating Options

11.1 Changing the Filter in Automatic Mode

If the FS-21 is in Automatic operating mode (yellow LED in the Hand key is OFF) and it is running with two filters in half-duplex mode, a filter can be changed after pressing the two Arrow keys simultaneously for 2 seconds. The filter which is ready in standby is put into operation and the filter previously in operation reverts to standby. The counters of the respective filter are retained.

11.2 Manual Operation

Activate Hand operating mode by pressing the Hand key. The yellow LED in the key lights up. If Hand operation is activated while a filter is actually regenerating, the regeneration step currently being performed is not automatically switched to the next step when completed. The ongoing regeneration time is incremented.

Note: If the FS-21 is in Hand operating mode, regeneration is no longer started automatically.

11.3 Regeneration Release in Hand Operation

If the FS-21 is in Hand operating mode (yellow LED in the Hand key is ON), regeneration of the filter currently in operation can be started by pressing the 'Down' key for approx 2 seconds.

11.4 Skip to Next Regeneration Step in Hand Operation

When the filter is regenerating, pressing the ‘Down' key for approx 2 seconds causes the system to skip to the next step.

Note: Where appropriate please pay attention on the valves operating time.

12 Fault Messages

The following fault message could appear:

```
**** Fault! ****
Service Interval
Maintenance
ring up Service
```

This message appears when the regeneration counter has reached the configured number of regenerations or the service interval is reached (Service after xxx days). This fault message can only be acknowledged when a reset is executed under 'Parameter/Service/service reset'.

If a fault occurs, the red LED in the Acknowledgement key flashes. After pressing the Acknowledgement key, the red LED lights up continuously. Each time a new alarm is received, the LED starts to flash again. The LED goes out when the cause of the fault is cleared.

13 Application and Configuration Examples

13.1 Connection of Two FS-21 in Interconnected Operation

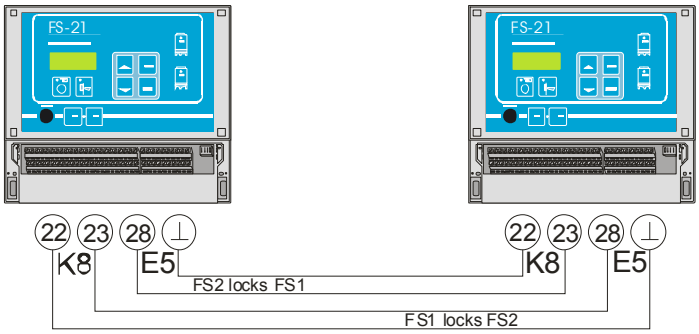

Connective operation is possible also between FS-21 and FS-201.

13.2 Connection of Several FS-21 in Interconnected Operation

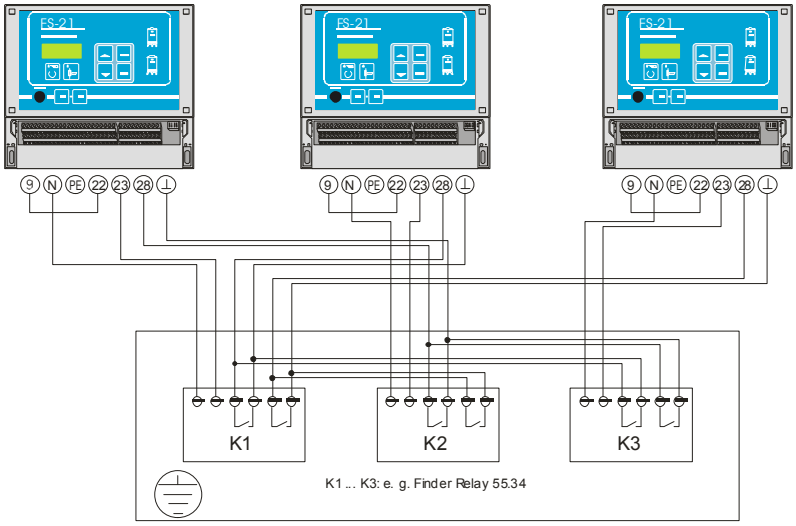

13

14 Technical Data

Only properly trained personnel may be deployed for assembly and starting up
Connection in compliance with VDE 0160

Operating voltage	230 V / 50 Hz (-10 / + 6 %)
Fuse for 230 V version	4 A T (*alternatively* 4 A mT)
Power consumption	approx. 8 VA (without external consumer)
Option 24 V Version	24 V AC, max. valve supply 20 VA, fuse 1 A T
Data retention following power failure	Time: Min. 72 hours Configuration, operation and parameter data permanently stored in the internal Flash memory
Outputs	two phase-assigned change-over contacts (230 V AC) two phase-assigned normally open switches (230 V AC) jointly fused with 4 A T (1 A T with 24 V Version) two neutral change-over contacts Relay contact: 230 V AC / 8A (AgNi)
Inputs	four inputs via optocoupler Contact load 10 V DC, approx 8 mA
Operating temperature	-20 ... +55 °C
Housing	DIN plastic housing for wall installation IP 54 Dimensions: W / H / D : 212 x 184 x 94 mm

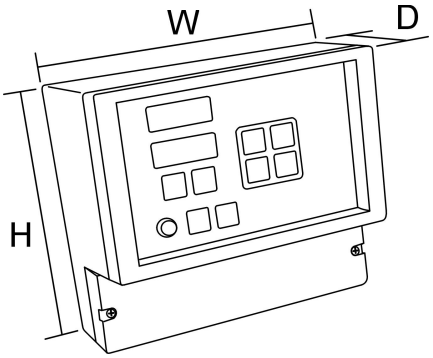

14.1 Ordering Information

Filter Control FS-21	Teilenummer
230 V – version:	**E1339**
230 V / 24 V – version:	**E1340**
alternatively:	
Filter Control FS-201	
230 V – version:	**E1330**
230 V / 24 V – version:	**E1332**

Note: FS-201 can be applied alternatively. FS-201 has an enhanced scope of functions as well as 8 relay outputs and 6 digital inputs.

15 Connection Examples

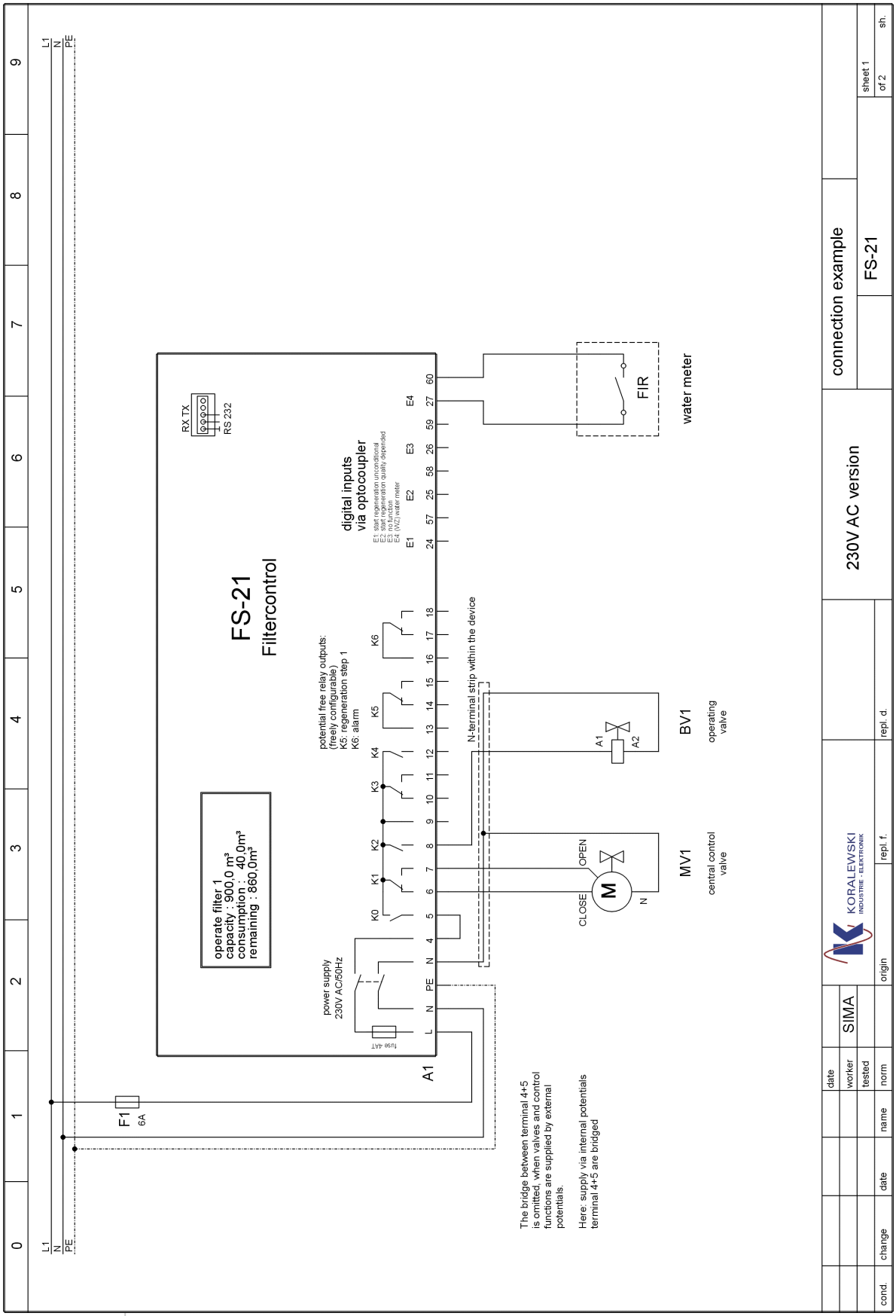

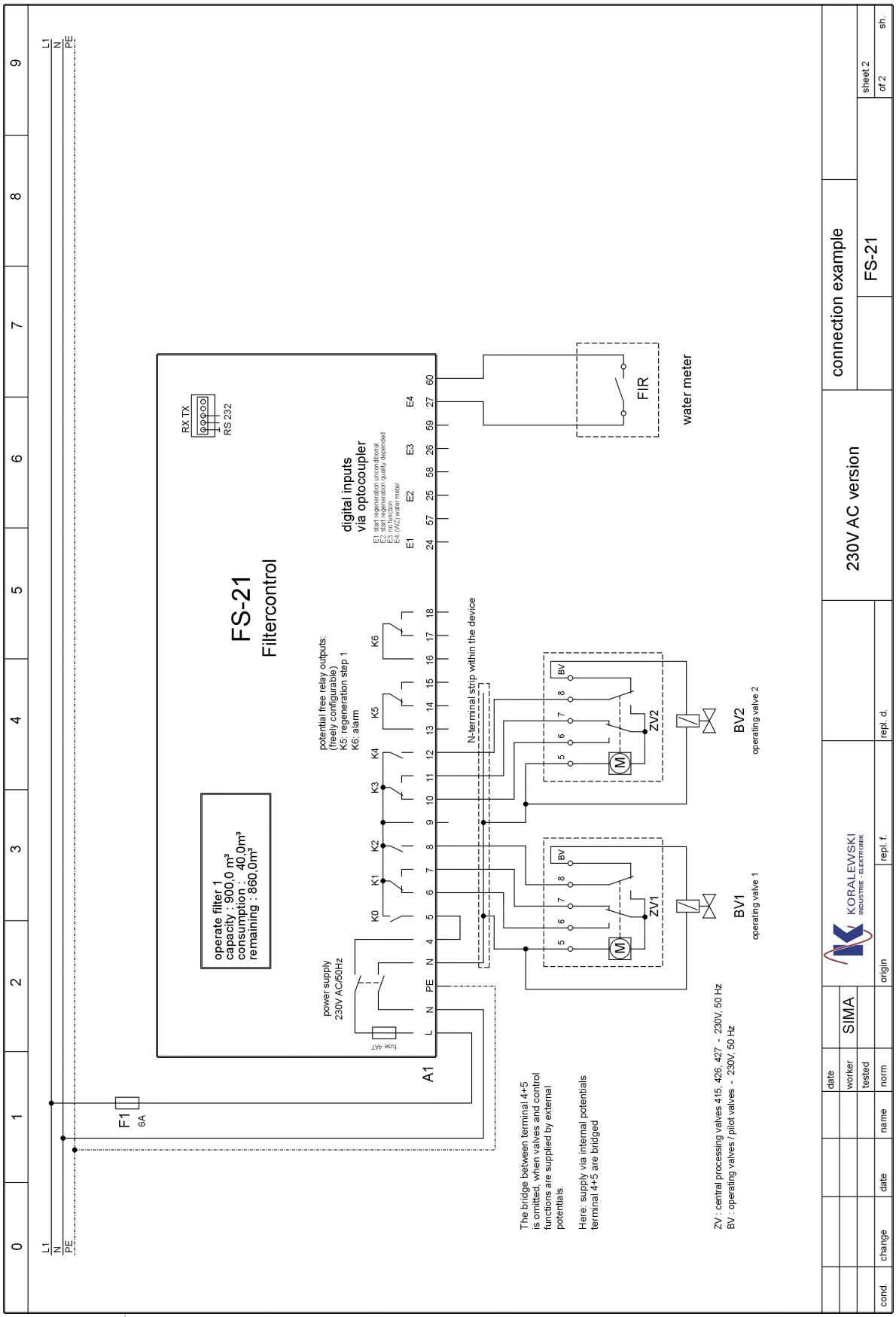
FS-21
Filtercontrol
RX TX
RS 232
operate filter 1
capacity : 900,0 m³
consumption : 40,0m³
remaining : 860,0m³
power supply
230V AC/50Hz
fuse 4AT
potential free relay outputs:
(freely configurable)
K0: regeneration step 1
K6: alarm
digital inputs
via optocoupler
E1: start regeneration unconditional
E2: start regeneration quantity dependent
E3: no function
E4: (W2) water meter
N-terminal strip within the device
A1
F1
6A
L1
N
PE
FIR
water meter
ZV1
ZV2
BV1
operating valve 1
BV2
operating valve 2
The bridge between terminal 4+5
is omitted, when valves and control
functions are supplied by external
potentials.
Here: supply via internal potentials
terminal 4+5 are bridged
ZV : central processing valves 415, 426, 427 - 230V, 50 Hz
BV : operating valves / pilot valves - 230V, 50 Hz
connection example
230V AC version
FS-21
KORALEWSKI
INDUSTRIE - ELEKTRONIK
SIMA
sheet 2
of 2

16 Default Settings

Consignment: _____ **Date:** _____

Configuration:

1. Number of Filters [X] 1 Filter *or* [ ] 2 Filters

2. Operating mode [ ] Parallel- *or* [ ] Half – duplex transmission

3. Regeneration Time [ ] / at **12 : 00** o Clock

Weekday: [X] Mon [ ] Tue [X] Wed [ ] Thu [X] Fri [ ] Sat [X] Sun

[ ] Maximal quantity / [X] Quantity / [ ] Quality

4. Filter values

Filter capacity	**10.0** m³
Minimum Quantity	**10** m³
Resin Quantity	**10** l
Resin factor	**1.0**
Raw water hardness	**1.00** °dH
mmol	**0.178**

[ ] Impulse per Liter *or* [X] Liter per Impulse **100**

5. Valve type [X] PVP-4 [ ] PVE [ ] 410 [ ] 420 [ ] 541 [ ] 435

[ ] 415 [ ] 426 [ ] 440 [ ] 441 [ ] MUVK 20-40

6. Program step timings *(No. Regeneration step ..... Seconds)*

Reg.-step 1	**60**	sec.;	Reg.-step 2	**60**	sec.;	Reg.-step 3	**60**	sec.;
Reg.-step 4	____	sec.;	Reg.-step 5	____	sec.;	Reg.-step 6	____	sec.;
Reg.-step 7	____	sec.;	Reg.-step 8	____	sec.;	Reg.-step 9	____	sec.;
Reg.-step 10	____	sec.;	Impulse / Running time	**90**	sec.;			

7. Service after **180** days / after **60** cycles

8. Digital Inputs

Input	Function	closed-circ. *or*	opened-circ.
E1	**1 Start regen. (uncoditional)**	[ ]	[X]
E2	**2 Start regen. (quality dep.)**	[ ]	[X]
E3	**0 no function**	[ ]	[X]
E4	**255 Water meter**	[ ]	[X]

9. Digital outputs

Output	Function	Sw.-on delay	S.-off delay	Close-	*or*	Open-circ
A5	**Reg. – step 1**	**0** sec.	**0** sec.	[ ]	*or*	[X]
A6	**Alarm**	**0** sec.	**0** sec.	[ ]	*or*	[X]

17 Form for Configuration and Parameter Settings

Consignment: _____ **Date:** _____

Configuration:

1. Number of Filters ☐ 1 Filter *or* ☐ 2 Filters

2. Operating mode ☐ Parallel- *or* ☐ Half – duplex transmission

3. Regeneration Time ☐ / at ___ : ___ o Clock

Weekday: ☐ Mon ☐ Tue ☐ Wed ☐ Thu ☐ Fri ☐ Sat ☐ Sun

☐ Maximal quantity / ☐ Quantity / ☐ Quality

4. Filter values Filter capacity _____ . _____ m³

Minimum Quantity _____ m³

Resin Quantity _____ l

Resin factor _____ . _____

Raw water hardness _____ . _____ °dH

mmol _____ . _____

☐ Impulse per Liter *or* ☐ Liter per Impulse _____

5. Valve type ☐ PVP-4 ☐ PVE ☐ 410 ☐ 420 ☐ 541 ☐ 435

☐ 415 ☐ 426 ☐ 440 ☐ 441 ☐ MUVK 20-40

6. Program step timings *(No. Regeneration step ..... Seconds)*

Reg.-step 1 ____ sec.; Reg.-step 2 ____ sec.; Reg.-step 3 ____ sec.;

Reg.-step 4 ____ sec.; Reg.-step 5 ____ sec.; Reg.-step 6 ____ sec.;

Reg.-step 7 ____ sec.; Reg.-step 8 ____ sec.; Reg.-step 9 ____ sec.;

Reg.-step 10 ____ sec.; Impulse / Running time _____ sec.;

7. Service after _____ days / after _____ cycles

8. Digital Inputs	**Input**	**Function**	**closed-circ.** *or*	**opened-circ.**
	E1	_____	☐	☐
	E2	_____	☐	☐
	E3	_____	☐	☐
	E4	_____	☐	☐

9. Digital Outputs	**Output**	**Function**	**Sw.-on delay**	**S.-off delay**	**Close- / Open-circ**
	A5	_____	_____ sec.	_____ sec.	☐ *or* ☐
	A6	_____	_____ sec.	_____ sec.	☐ *or* ☐